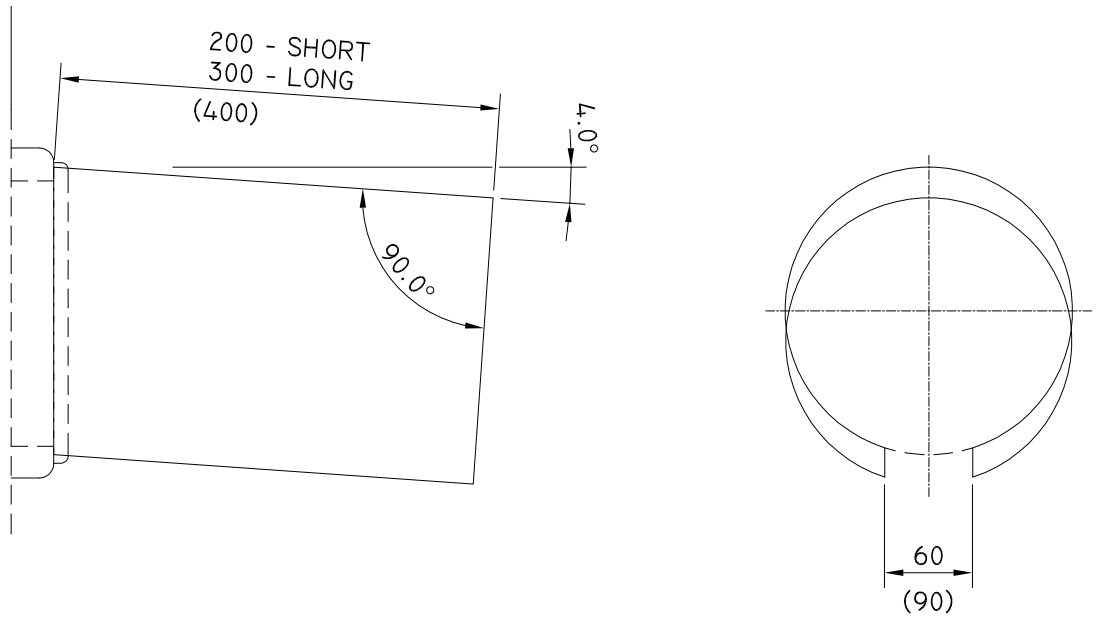

TYPE 3. CLOSED VISOR

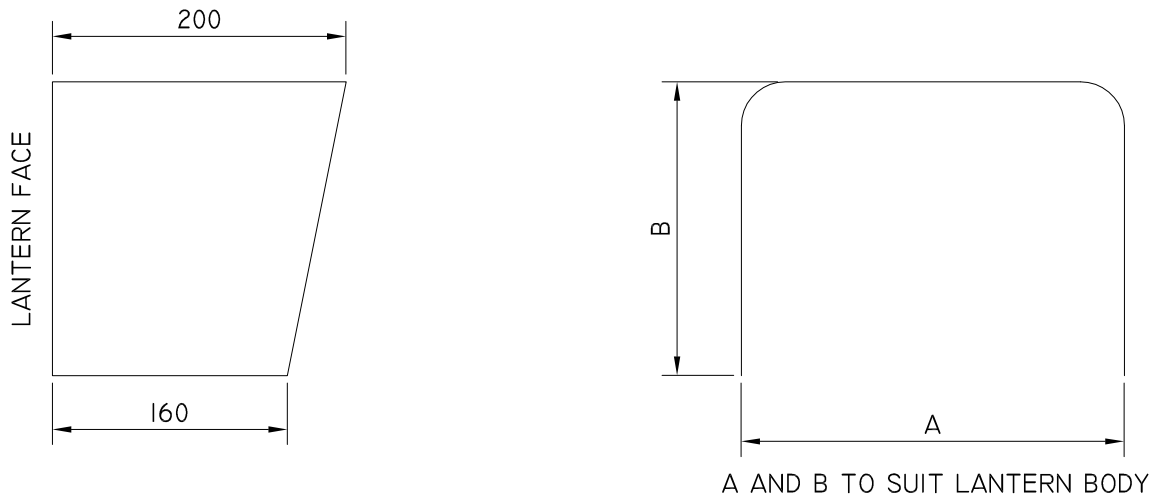

TYPE 4. PEDESTRIAN VISOR

ISSUE	DETAILS	DRN	DATE
B	UPDATE TO STANARD DRAWING	B.V	18/02/2021
A	UPDATES TO STANARD VIC ROADS DRAWINGS		

DRAWN B. VINEY
REVIEWED N. HARREX
APPROVED

Tasmanian Government
Department of State Growth

DEPARTMENT OF STATE GROWTH
STANDARD DRAWING
VISOR DIMENSIONS
DRAWING ADAPTED FROM VICROADS STANDARD DRAWING TC-1127

DO NOT SCALE
USE OF THIS DRAWING IS GOVERNED BY THE CONDITIONS ON THE DEPARTMENT STATE GROWTH WEBSITE.
IT IS THE USERS RESPONSIBILITY TO ENSURE IT IS THE CURRENT REVISION.

STANDARD DRAWING NUMBER: SD-101-104
REVISION NUMBER: B