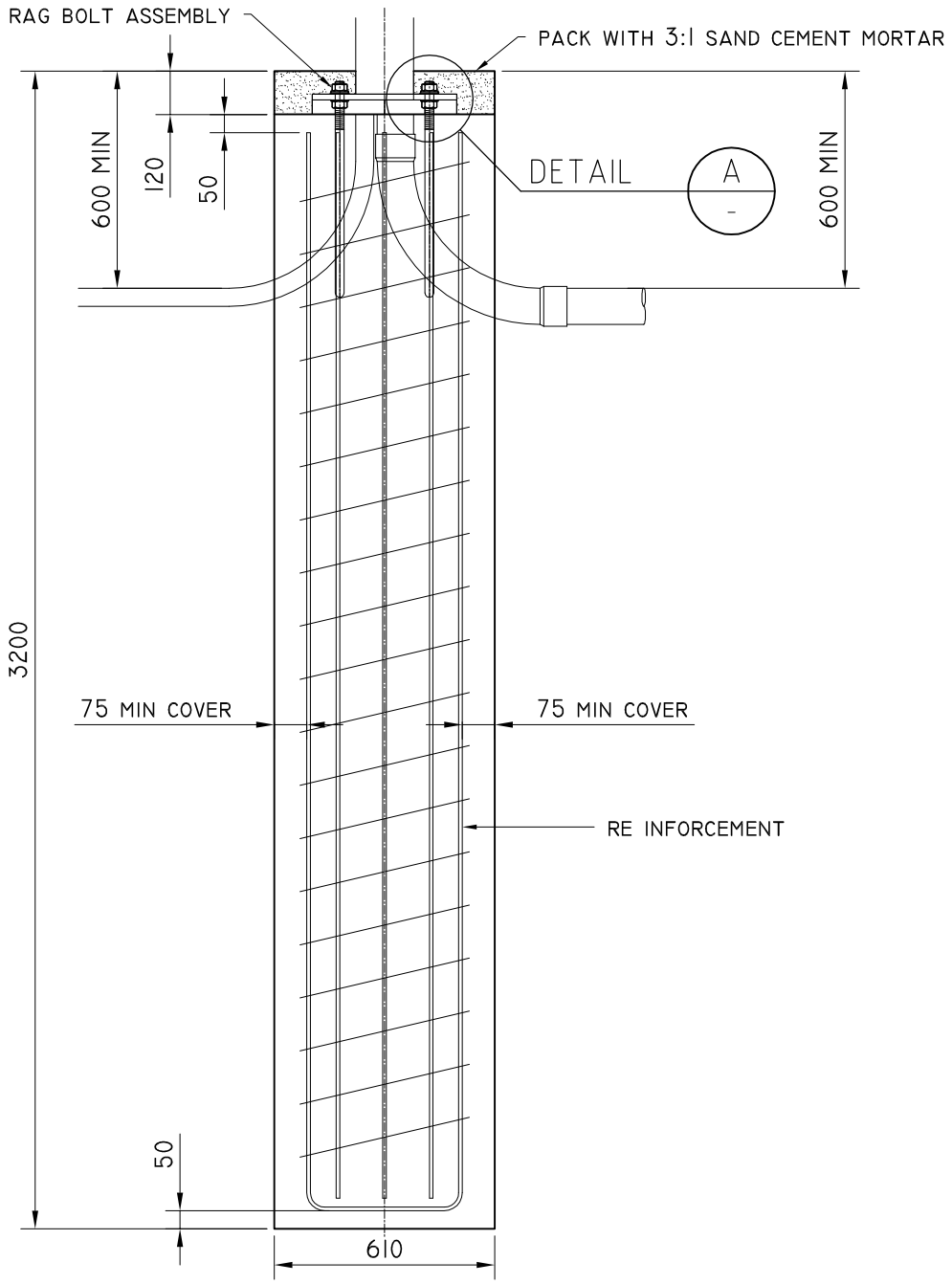

NOTES:

1. TRAFFIC SIGNAL AND STREET LIGHTING CONDUITS TO BE ALIGNED AS REQUIRED.
2. CONCRETE STRENGTH GRADE SHALL BE N32 TO THE REQUIREMENTS OF AS 1379 - "SPECIFICATION OF CONCRETE"

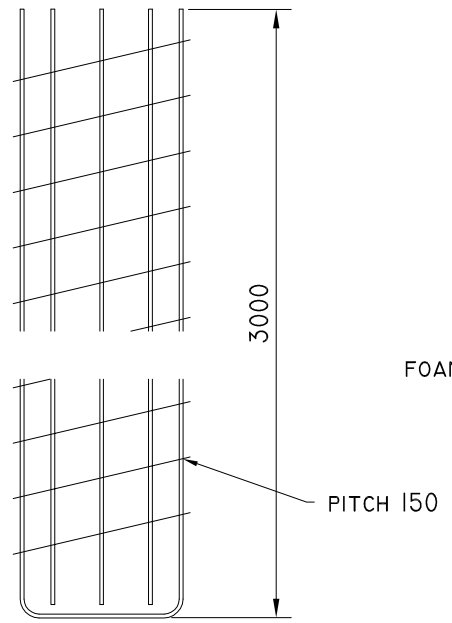

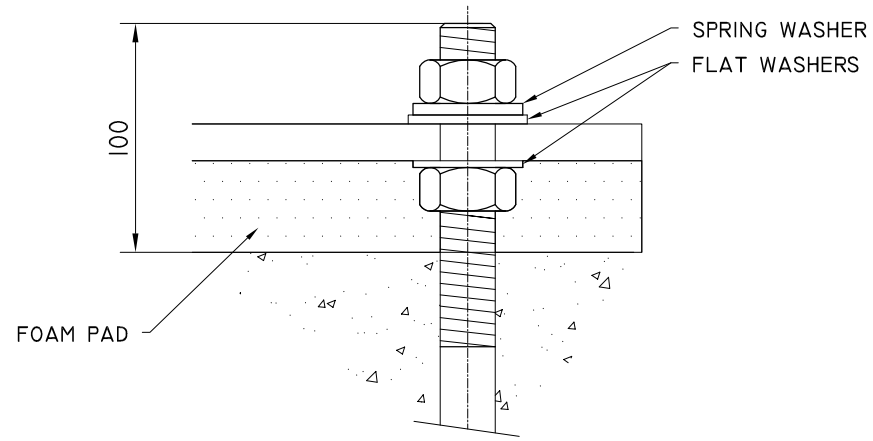

DETAIL A
SCALE : 1:10

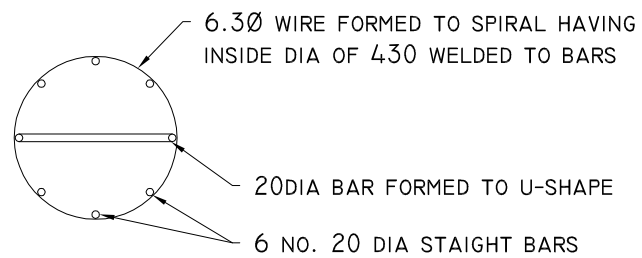

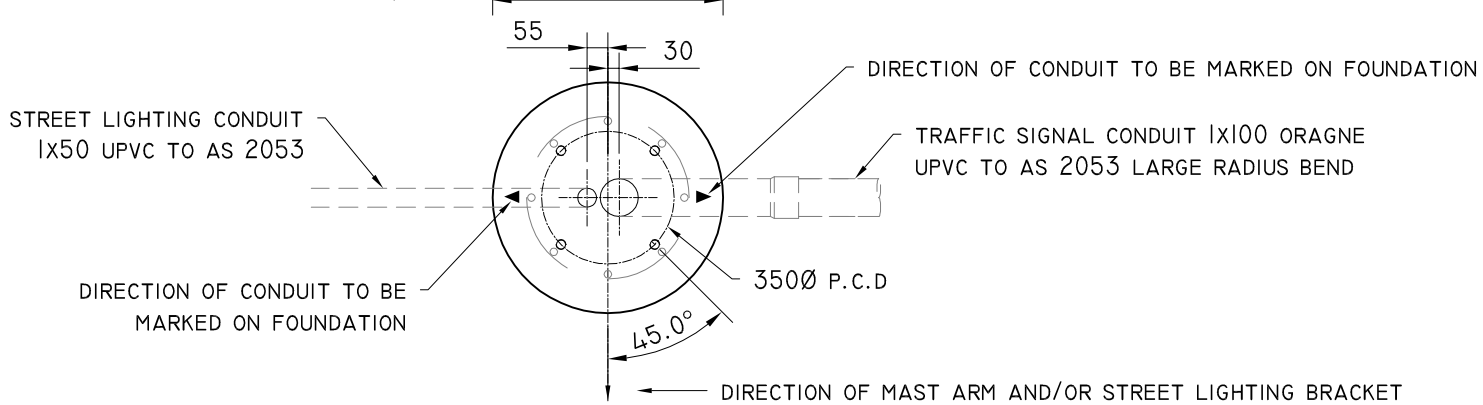

PLAN
SCALE : 1:20

PILE DEPTH	CONCRETE VOLUME m3	POLE TYPE	RAG BOLTS
3220	0.9	JUMA JUP MA	HIGH STRENGTH

ISSUE	DETAILS	DRN	DATE
B	UPDATE TO STANARD DRAWING	B.V	10/12/2020
A	UPDATES TO STANARD VIC ROADS DRAWINGS		

DRAWN B. VINEY
REVIEWED N. HARREX
APPROVED

Tasmanian Government
Department of State Growth

DEPARTMENT OF STATE GROWTH
STANARD DRAWING
BORED PILE FOR MA, JUP & JUMA
DRAWING ADDAPTED FROM VICROADS STANDARD DRAWING TC-1201

DO NOT SCALE
USE OF THIS DRAWING IS GOVERNED BY THE CONDITIONS ON THE DEPARTMENT STATE GROWTH WEBSITE.
IT IS THE USERS RESPONSIBILITY TO ENSURE IT IS THE CURRENT REVISION.

STANDARD DRAWING NUMBER: SD-101-003
REVISION NUMBER: A